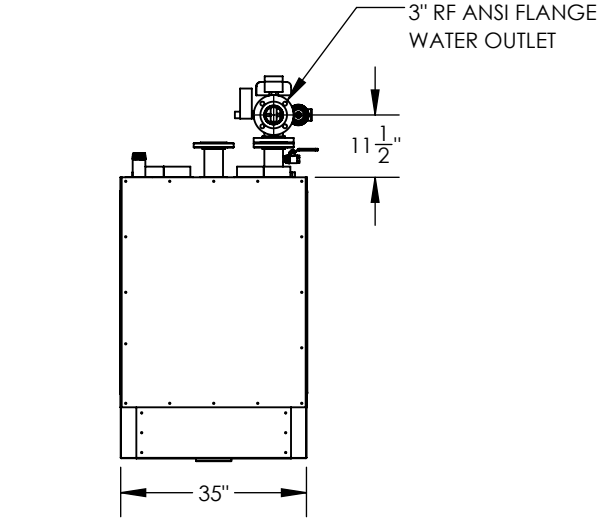

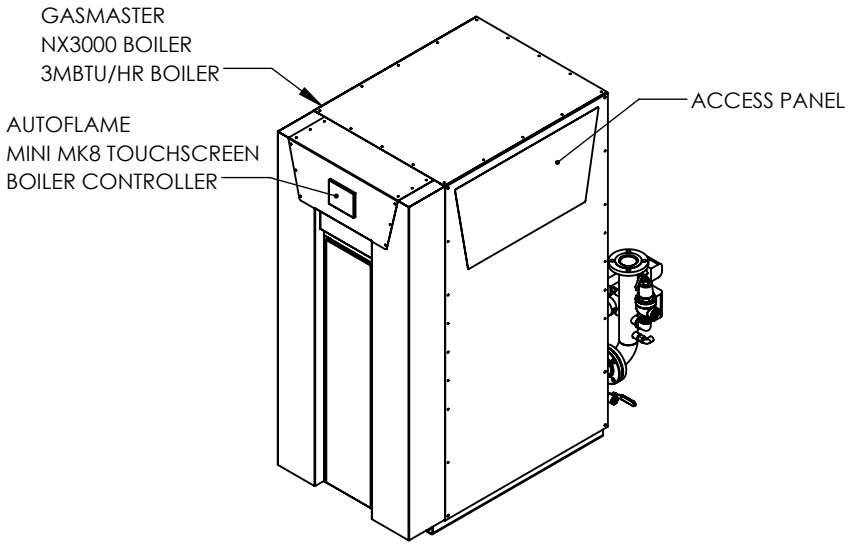

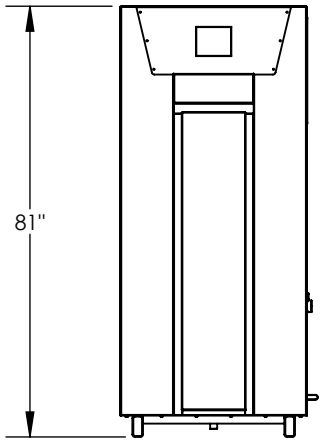

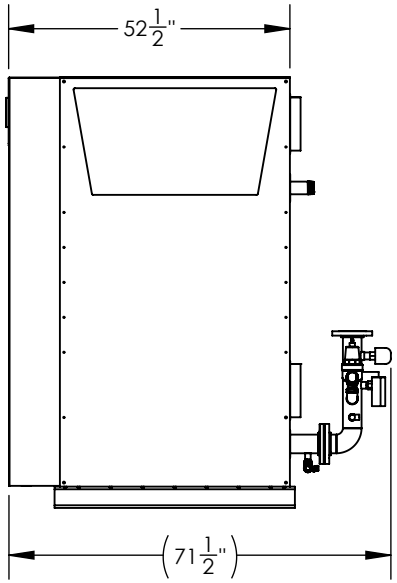

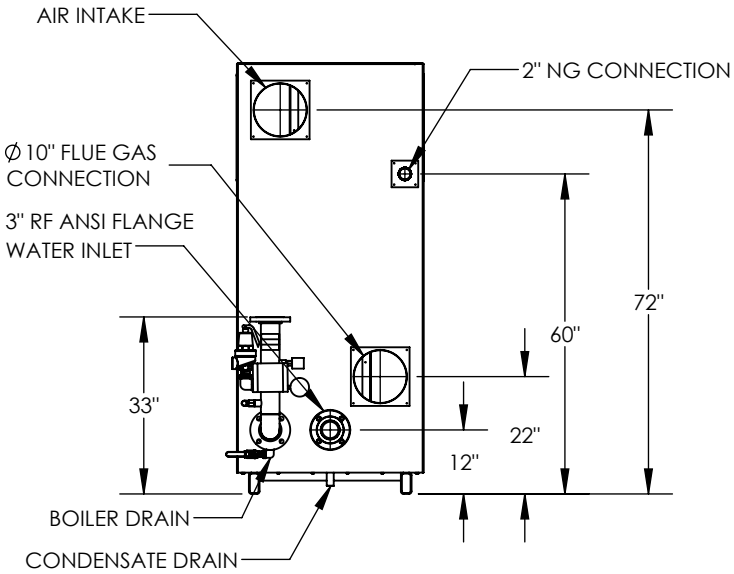

NX-3000

PROPRIETARY AND CONFIDENTIAL

THE INFORMATION CONTAINED IN THIS DRAWING IS THE SOLE PROPERTY OF GASMASTER INDUSTRIES. ANY REPRODUCTION IN PART OR AS A WHOLE WITHOUT THE WRITTEN PERMISSION OF GASMASTER INDUSTRIES IS PROHIBITED.

UNLESS OTHERWISE SPECIFIED:
DIMENSIONS ARE IN INCHES
TOLERANCES:
FRACTIONAL: ±1/16"
ANGULAR: ±1°

THIRD ANGLE PROJECTION

GASMASTER INDUSTRIES LTD
3105-6900 Graybar Rd, Richmond BC V6W 0A5

SIZE	REV
A	0

DO NOT SCALE DRAWING	SCALE: 1:36	WEIGHT:	SHEET 1 OF 1